ME 675
Predictive Control of Dynamic Systems

Instructor: Youngki Kim, PhD

Mechanical Engineering, CECS

Email: youngki@umich.edu

- Lecturer: Youngki Kim, PhD
- E-mail: youngki@umich.edu
- Office Hours: held by appointment upon request,

Course Description

- This course introduces predictive control of dynamic systems to students working on advanced controls. The topics will include unconstrained and constrained optimization, discrete-time optimal control problem, dynamic programming, stability, invariance, reachability, and linear predictive control problems with application examples in mechanical engineering.

Objectives

- Students who successfully complete this course are expected to apply theory and mathematical methods of discrete-time optimal control in different application domain.

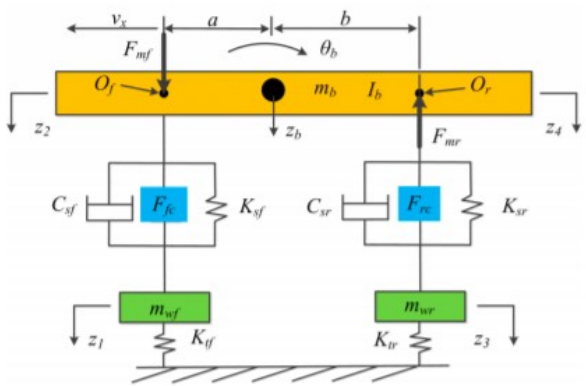

Figure 1. Equivalent half-vehicle model.

where $\boldsymbol{P}_t$ is a constant. A description of $\boldsymbol{H}$, $\boldsymbol{G}_t$, and $\boldsymbol{P}_t$ is provided in Appendix C. The problem can be equivalent to the quadratic programming problem, that is:

$$\begin{aligned} &\min[\Delta \boldsymbol{U}_t{}^{\mathrm{T}}, \varepsilon]\boldsymbol{H}_t[\Delta \boldsymbol{U}_t{}^{\mathrm{T}}, \varepsilon]^{\mathrm{T}} + \boldsymbol{G}_t[\Delta \boldsymbol{U}_t{}^{\mathrm{T}}, \varepsilon]^{\mathrm{T}} \\ &\boldsymbol{s.t} \quad \Delta \boldsymbol{U}_{\min}(kk) \le \Delta \boldsymbol{U}_t(kk) \le \Delta \boldsymbol{U}_{\max}(kk), kk = 1, \cdots, 3\mathrm{Nc} \\ &\qquad \boldsymbol{Y}_{\min}(kk_1) \le \boldsymbol{Y}(kk_1) \le \boldsymbol{Y}_{\max}(kk_1), kk_1 = 1, \cdots, 11Np \\ &\qquad \boldsymbol{U}_{\min}(kk_2) \le \boldsymbol{u}(t-1|t)(kk_2) + \Delta \boldsymbol{U}_t(kk_2) \le \boldsymbol{U}_{\max}(kk_2), kk_2 = 1, 2, 3 \end{aligned} \tag{17}$$

Because the half-vehicle model uses the first control vector of the optimized control sequence, only the first control vector is constrained here—that is, $\boldsymbol{U}_{min}(2{:}3,1) = [-1500, -1500]$, $\boldsymbol{U}_{max}(2{:}3,1) = [1500, 1500]$—and there is no restriction on other elements of the first control vector.

In this study, the first control quantity (i.e., the braking intensity z) is treated as interference. This goal can be achieved through constraint restrictions. The specific constraints are:

$$\begin{cases} \Delta \boldsymbol{U}_{\min}(1) = [z(t) - z(t-1)] \\ \Delta \boldsymbol{U}_{\max}(1) = [z(t) - z(t-1)] \end{cases} \tag{18}$$

where $z(t)$ and $z(t-1)$ are the braking intensity at time t and $t-1$, respectively. In other control time domains, the braking intensity increment constraints are all zero.

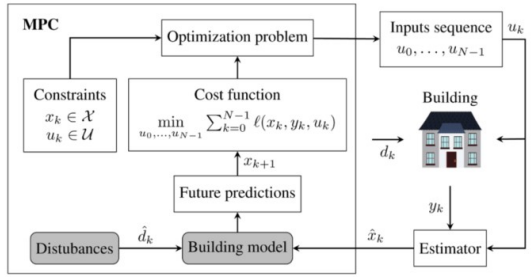

Fig. 2. Schematic representation of the standard closed-loop system for building control with MPC and state estimator.

2.1.1. Standard MPC scheme

Fig. 2 illustrates a typical abstract closed-loop MPC scheme which can describe most of the building control applications. The control loop consists of the building affected by disturbances d (e.g., weather conditions), predicted by weather forecast $\hat{d}$, the state estimator providing the state estimates $\hat{x}$ and the MPC controller which optimally manipulates the control actions u (e.g., heat flows, valves opening, pump powers), e.g., such that it minimizes used energy and keeps the output vector y (e.g., room temperatures) within the given comfort bounds.

2.1.2. General MPC formulation

The general MPC formulation for buildings can be represented as the following optimal control problem (OCP) in discrete time:

$$\min_{u_0,\ldots,u_{N-1}} \ell_N(x_N) + \sum_{k=0}^{N-1} \ell_k(x_k, y_k, r_k, u_k, s_k) \tag{1a}$$

$$\text{s.t. } x_{k+1} = f(x_k, u_k, d_k), k \in \mathbb{N}_0^{N-1} \tag{1b}$$

$$y_k = g(x_k, u_k, d_k), k \in \mathbb{N}_0^{N-1} \tag{1c}$$

$$u_k = f_{\mathrm{HVAC}}(x_k, a_k, m_k), k \in \mathbb{N}_0^{N-1} \tag{1d}$$

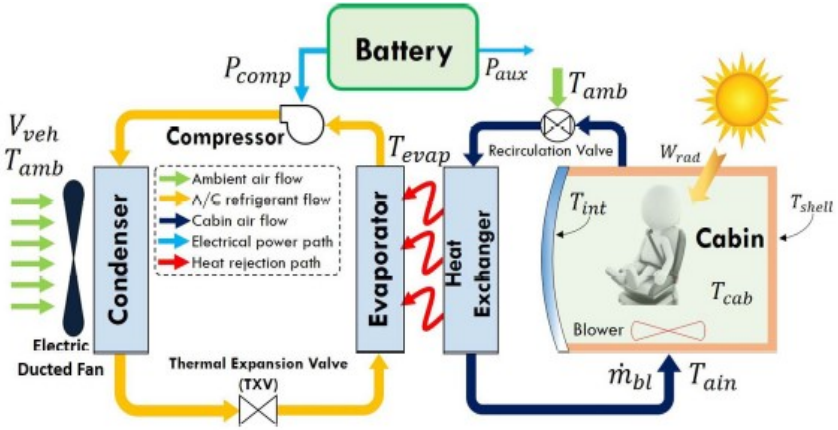

$$\begin{aligned} \min_{\substack{\Delta \dot{m}_{\mathrm{bl}} \\ T_{\mathrm{evap}}^{\mathrm{targ}}}} \quad & \sum_{i=0}^{N_p} \left\{ (P_{\mathrm{DACP}}(i|k) - \beta(i|k) \cdot P_{\mathrm{DACP}}^{\mathrm{targ}}(i|k))^2 \right\} \\ \text{s.t. } & T_{\mathrm{evap}}(i+1|k) = f_{T_{\mathrm{evap}}}(i|k) \\ & \dot{m}_{\mathrm{bl}}(i+1|k) = f_{\dot{m}_{\mathrm{bl}}}(i|k) \\ & T_{\mathrm{evap}}^{\mathrm{LB}} \le T_{\mathrm{evap}}(i|k) \le T_{\mathrm{evap}}^{\mathrm{UB}}(i|k) \\ & 0.05 \text{ kg/s} \le \dot{m}_{\mathrm{bl}}(i|k) \le 0.15 \text{ kg/s} \\ & -0.05 \text{ kg/s} \le \Delta \dot{m}_{\mathrm{bl}}(i|k) \le 0.05 \text{ kg/s} \\ & 2\ ^\circ\mathrm{C} \le T_{\mathrm{evap}}^{\mathrm{targ}}(i|k) \le 10\ ^\circ\mathrm{C} \\ & T_{\mathrm{evap}}(0|k) = T_{\mathrm{evap}}(k), \quad \dot{m}_{\mathrm{bl}}(0|k) = \dot{m}_{\mathrm{bl}}(k). \end{aligned} \tag{5}$$

Prerequisite

- Graduate Standing;
- Knowledge of (1) **Linear System Control** (ME564 or any equivalent course, e.g. ECE 560); (2) Strong mathematical background in Vector and Matrix algebra, Ordinary differential equations, and Calculus; and (3) Fluency in Matlab/Simulink; and **willingness** to learn advanced control courses.

Requirements

- Matlab/Simulink will be used in this course (HW assignments and Term Project) and hence students should be familiar with it. Matlab code debugging should be done by students.
- Model Predictive Control: Theory, Computation, and Design. 2nd Edition by James B. Rawlings, David Q. Mayne, Moritz M. Diehl
- Lecture slides will be provided via CANVAS.
- References:

[1] Predictive Control for Linear and Hybrid Systems, by Francesco Borrelli, Alberto Bemporard, and Manfred Morari
[2] Optimization by Vector Space Methods, by Luenberger
[3] Applied Optimal Control, by Bryson and Ho

Tentative Course Outline

Week	Topics
1	Introduction Mathematical foundations
2	Linear Systems Theory
3-4	Function Minimization Problem - Unconstrained and Constrained Optimization problems - Necessary and Sufficient Conditions for Convex Problems
5	Discrete-time optimal control and Dynamic Programming
6	Project Proposal Presentation (via Zoom meeting)
7-8	MPC formulation - General MPC formulation - Linear MPC problems
9	Theoretical issues - Reachability - Feasibility - Invariant Set
10-12	MPC Variants: Explicit MPC, Robust MPC, Stochastic MPC
13	Continuous-time Optimal Control
14	Project Presentation (via Zoom meeting)

Grading Policy

HW Assignments	**40 %**
Term Project	**60 %**

- 3-4 HW assignments will be posted on CANVAS.
- All your HW solutions must be submitted on CANVAS: **Online submission ONLY**!
- Late homework will **NOT** be accepted unless you prove with some documents or evidences that your case is legitimate.
- Plagiarism is **NOT** allowed and will be extremely detrimental to your grade.

Term Project

- It is an individual project, not a group project.
- Software must be used in your project; for instance, Matlab/Simulink

Project Requirements

- Initial Proposal
  - This should include the topic (project title), team members, motivations/ background, basic problem description, project timeline, and references. The length of your initial proposal should NOT exceed **3 pages**.
- Midterm progress report
  - You should have a clear idea of your approach and an updated plan of activities for the rest of the project
  - Some preliminary results. The length of your progress report should NOT exceed **5 pages**.
- Final Report
  - The length of your final report should NOT exceed **15 pages** (without appendices and references) with a single column format.

Important Dates

- Project Proposal Submission & Meeting via Zoom
  - In the week of September 22nd
  - Individual presentation and discussion
  - Detailed information to be announced
- Project Midterm Report Submission
  - November 12th Wednesday 11:59 pm
  - Detailed information to be announced
- Final Project Presentation via Zoom
  - December 9th Tuesday 6:00 pm
  - Detailed information to be announced
- Final Project Report Submission
  - December 14th Friday 11:59 pm
  - Detailed information to be announced

Topics

- You may choose a problem of your interest:
  - Select a dynamic system whose state is uniquely specified by a set of variables and whose behavior is described by predefined rules.
  - Formulate a control problem, including the cost function, constraints, dynamics equations, etc.
  - Implement MPC (or optimization-based control)
  - Demonstrate the effectiveness of your controller.

- Alternatively, you may reproduce the results in a technical paper of your choice.

Literature Search

- Google scholar is a great tool for finding research articles.

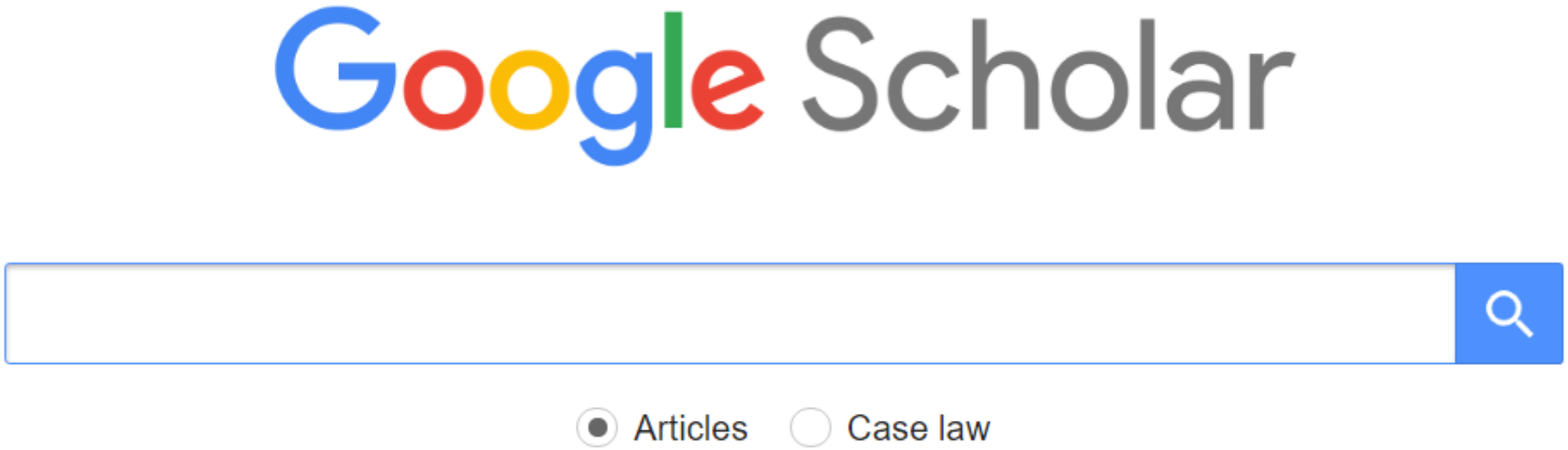

- However, it is not a full-text database.
- Thankfully, almost all GOOD reputable journals and conference proceedings are available through the UM library when you are connected via the UM VPN.